Instruction manual

Undercounter dishwasher single skin
50x50 - 230 V
QQI 52

2026-10-20

www.rmgastro.com

TABLE OF CONTENTS

1. DECLARATION OF CONFORMITY 3

2. TECHNICAL DATA 3

3. LOCATION ELECTRIC 3

4. SAFETY MEASURES FOR FIRE PROTECTION 3

5. INSTALLATION 4

6. WATER CONNECTION 4

7. CONNECTING THE ELECTRICAL CABLE TO THE NETWORK 4

8. INSTRUCTIONS FOR USE 10

9. CLEANING AND MAINTENANCE 17

1. DECLARATION OF CONFORMITY

Decree of the Ministry of Health of the Czech Republic no. 38/2001 Coll. of 19 January 2001 Regulation (EC) No 1907/2006 - Registration, Evaluation, Authorisation and Restriction of Chemicals (REACH) Regulation of the European Parliament and Council Regulation (EC) no. 1935/2004 of 27 October 2004

The products meet the requirements of §26 of Act No.258/2000 as amended. The products meet the requirements of RoHS Directive 2015/863/EU, 10/2011, 517/2014, 2015/1094, 2015/1095.

Attention, the manufacturer gives up any responsibility in case of direct and indirect damage that is relate to poor installation, incorrect intervention or adjustments, insufficient maintenance, incorrect by using and which are eventually caused by other causes that the points referred to in the conditions sales. This appliance is intended only for professional use and must be operated by qualified by persons. Parts that have been secured by the manufacturer or authorized worker after the setting rebuild.

2. TECHNICAL DATA

The label with technical data is located on the side or back panel of the device. Please read the wiring diagram and all the following information in the attached manual before installation.

Net Width [mm]	Net Depth [mm]	Net Height [mm]	Net Weight [kg]	Power electric [kW]
575	820	820	54.00	3.500

Loading	Basin volume [l]	Boiler capacity [l]	Boiler power [kW]	Gross depth [mm]
230 V / 1N - 50 Hz	20	6.00	3.000	655

Door clear height [mm]	Gross Height [mm]	Number of arms for both rinsing and washing	Number of programs	Number of skin
365	870	2	5	1

Tank power [kW]	Gross Volume [m3]	Net Volume [m3]	Gross Weight [kg]	Gross Width [mm]
2.000	0.356	0.285	60.00	625

3. LOCATION ELECTRIC

For the correct operation and placement of the appliance, it is necessary to observe the following all prescribed standards for the given market. Unpack the device and check that the device has not been damaged during transport. Place the device on a horizontal surface (maximum unevenness up to 2°). Small unevenness can be leveled with adjustable feet. If the device will be placed in such a way that it will be in contact with the walls of the furniture, these must withstand a temperature of up to 60°C. Installation, adjustment, commissioning must be performed by a qualified person who is authorized to perform such operations, according to applicable standards. The device can be installed separately or in series with devices of our production. A minimum distance of 10 cm from flammable materials must be observed. In this case, it is necessary to secure the appropriate modifications to ensure the thermal insulation of the combustible parts. The appliance must only be installed on a non-flammable surface or against a non-flammable wall. **Parts of the appliance provided by the manufacturer. or his representative, the worker performing the installation may not rebuild the product.**

4. SAFETY MEASURES FOR FIRE PROTECTION

- the appliance may only be operated by adults
- the appliance may be used safely in accordance with applicable market standards:

Fire protection in spaces with special risk or danger

Protection against the effects of heat

- the appliance must be placed so that it stands or hangs firmly on a non-combustible surface

Objects of flammable substances must not be placed on the appliance at a distance less than a safe distan-

ce from it (the smallest distance between the appliance and flammable substances is 10 cm).

Table: degree of flammability of building materials included in st. flammability of substances and products

Degree of flammability	Building materials
A - non-flammable	granite, sandstone, concrete, brick, ceramic tiles, plaster
B - Not easily flammable	Acumin, Heraclitus, Lihnos, Itaver
C1 - highly flammable	wood, hardwood, plywood, hard paper, umakart
C2 - moderately flammable	chipboards, solodur, cork boards, rubber, flooring
C3 - Highly flammable	wood fiber boards, polystyrene, polyurethane, PVC

- information on the degree of flammability of common building materials is given in the table above. Appliances must be installed in a safe manner. During installation, the relevant design, safety and hygiene regulations must also be respected:
- fire safety of local appliances and heat sources
- fire protection in areas with special risk or danger
- protection against the effects of heat

5. INSTALLATION

Important: The manufacturer does not provide any warranty for defects arising as a result of incorrect use, failure to follow the instructions contained in the attached user manual and mishandling of appliances. Installation, modification and repair of appliances for large kitchens, as well as their dismantling due to possible damage to the gas supply, can only be carried out on the basis of a maintenance contract, this contract can be concluded with an authorized dealer, while technical regulations and standards and regulations must be observed regarding installation, electrical supply, gas connection and work safety. Technical instructions for installation and adjustment, for use by specialized technicians ONLY. The instructions that follow refer to a technician qualified for installation to carry out all operations in the most correct manner and according to the applicable standards. Any activity related to regulation etc. must only be performed with the device disconnected from the network. If it is necessary to keep the appliance under voltage, the utmost care must be taken. The type of appliance for extraction is declared on the nameplate, it is an A1 appliance.

6. WATER CONNECTION

Water connection is done using G1/2 threaded hoses. The water supply must be fitted with separate closures that are freely accessible and within reach of the device. The device includes return valves. The water for filling the duplicator space must be softened - a maximum of 5 ° the French scale of water hardness. The water pressure must be in the range of 50-300 kPa.

7. CONNECTING THE ELECTRICAL CABLE TO THE NETWORK

Installation of the electrical supply - this supply must be separately secured. Ato with the corresponding circuit breaker of rated current depending on the power input of the installed device. Check the power consumption of the device on the production label on the back panel (or side) of the device. The connected ground wire must be longer than the other wires. Connect the device directly to the network, it is necessary to insert a switch between the device and the device with a minimum distance of 3 mm between the individual contacts, which corresponds to the applicable standards and load. The earth supply (yellow-green) must not be interrupted by this switch. Connect the device to the mains if the socket has adequate protection. In any case, the supply cable must be located so that it does not reach a temperature of 50 degrees higher than the environment at any point. Before the appliance is connected to the network, it is necessary to first make sure that:

- the supply circuit breaker and the internal distribution can withstand the current load of the appliance (see matrix label)
- the distribution board is equipped with effective grounding according to the standards of the relevant

market and the conditions given by law

- the socket or switch in the supply is easily accessible from the appliance
- the electrical supply to the device must be made of oil-resistant material

We disclaim any responsibility in the event that these standards are not respected and in the event of a violation of the above principles. Before first use, you must clean the device, see chapter """"cleaning and maintenance"""". The appliance must be grounded using a screw with a grounding mark.

- Do not insert the plug of the power supply into the electrical outlet. sockets and do not pull out the zel. sockets with wet hands and pulling on the power cord!
- Do not use extension cords or multiple sockets.
- **The mains connection point must have a maximum of the following impedance: ZMAX = 0.042 + j 0.026 Ω for the phase conductors and 0.028 + j 0.017 Ω for the neutral conductor.**

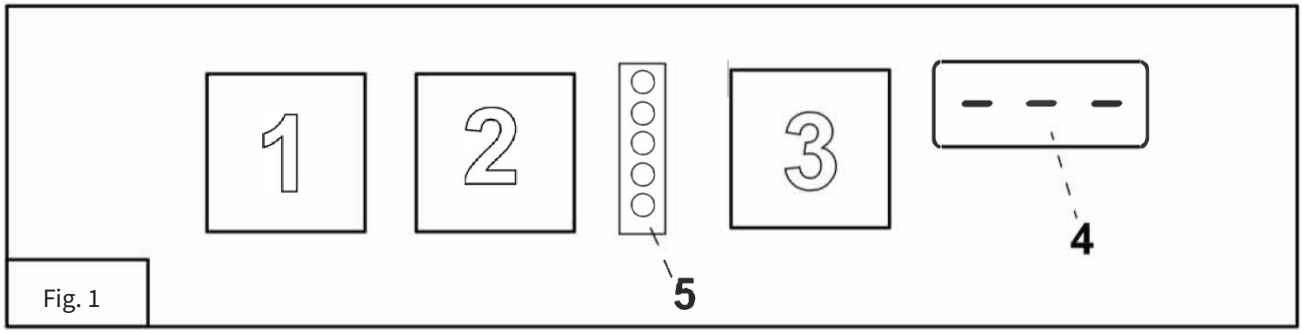

Fig. 1

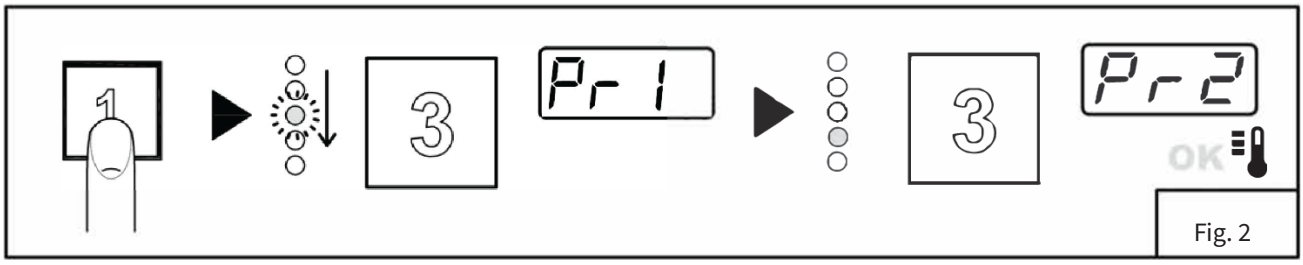

Fig. 2

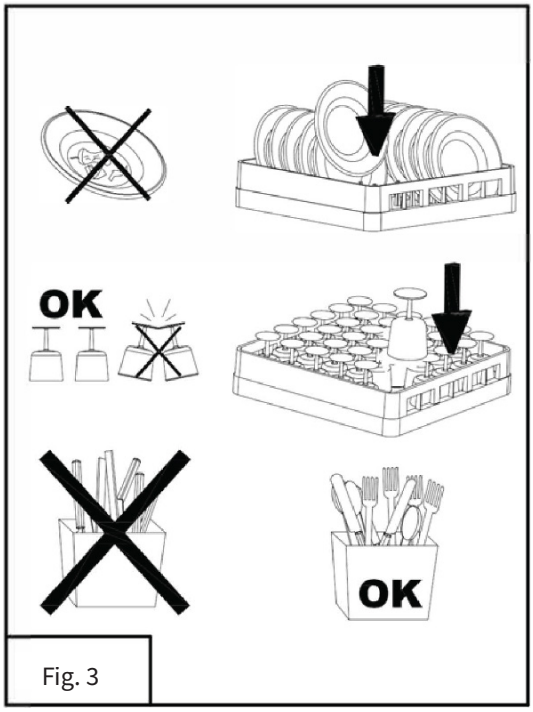

Fig. 3

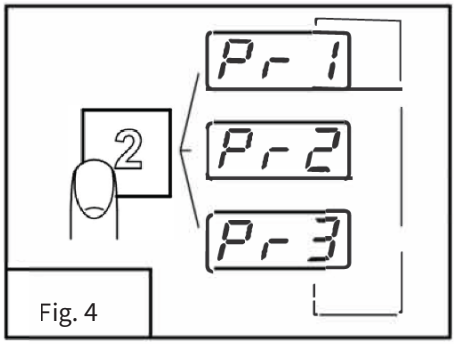

Fig. 4

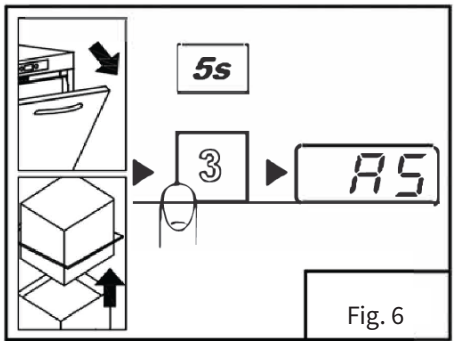

Fig. 6

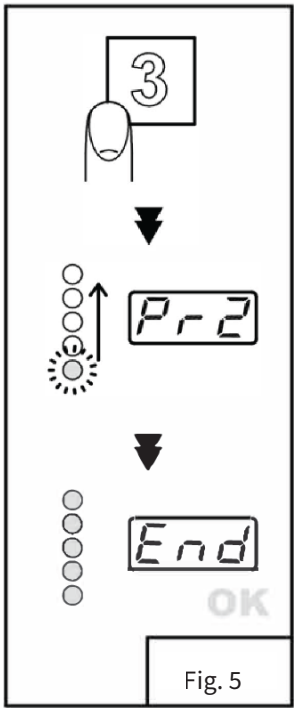

Fig. 5

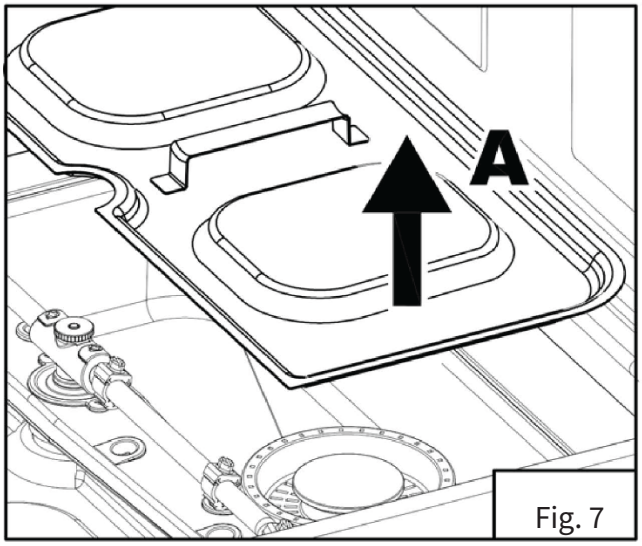

Fig. 7

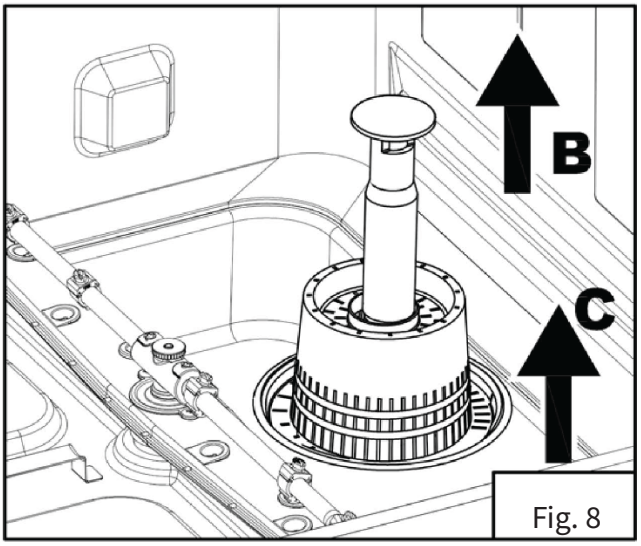

Fig. 8

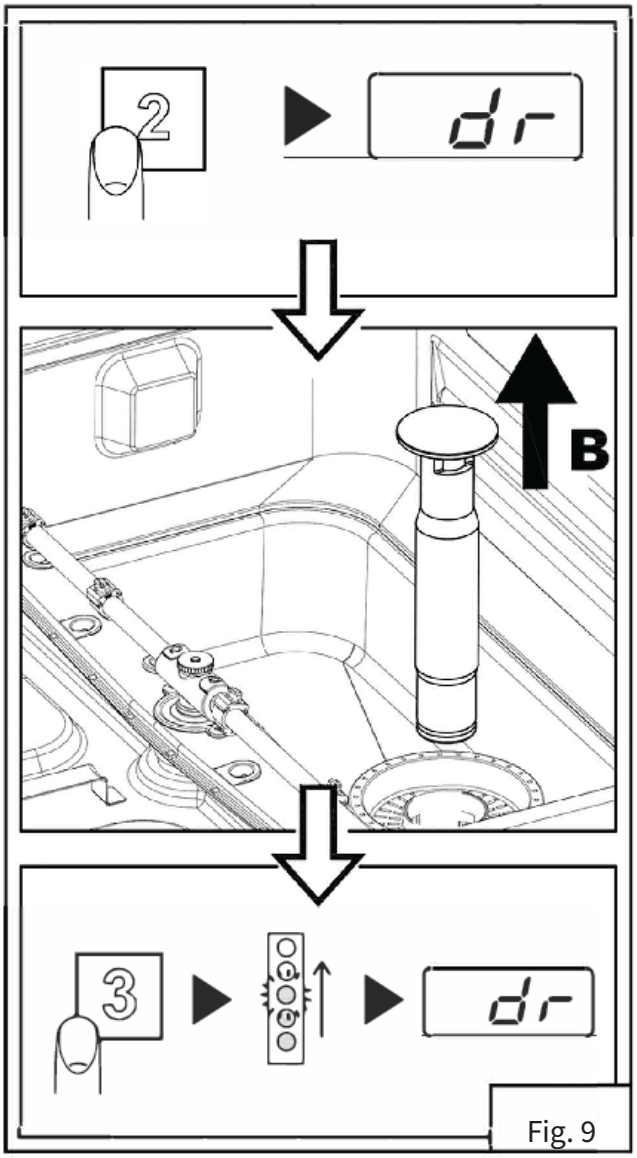

Fig. 9

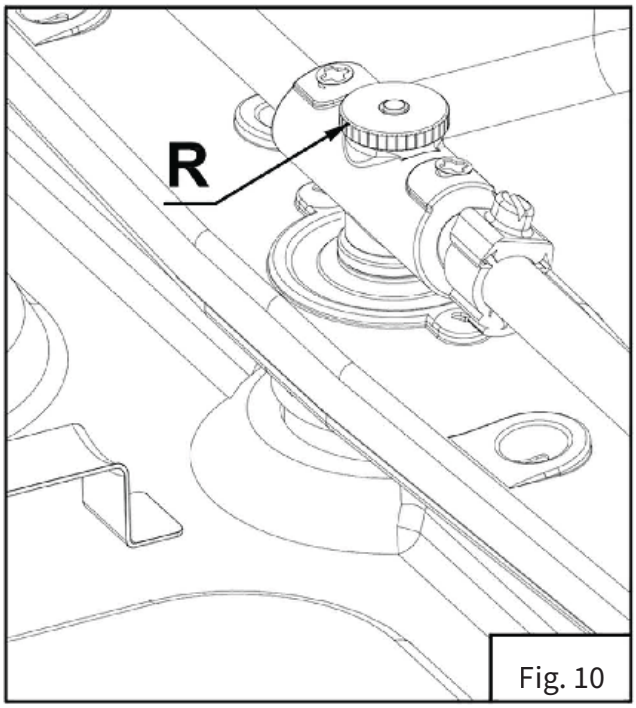

Fig. 10

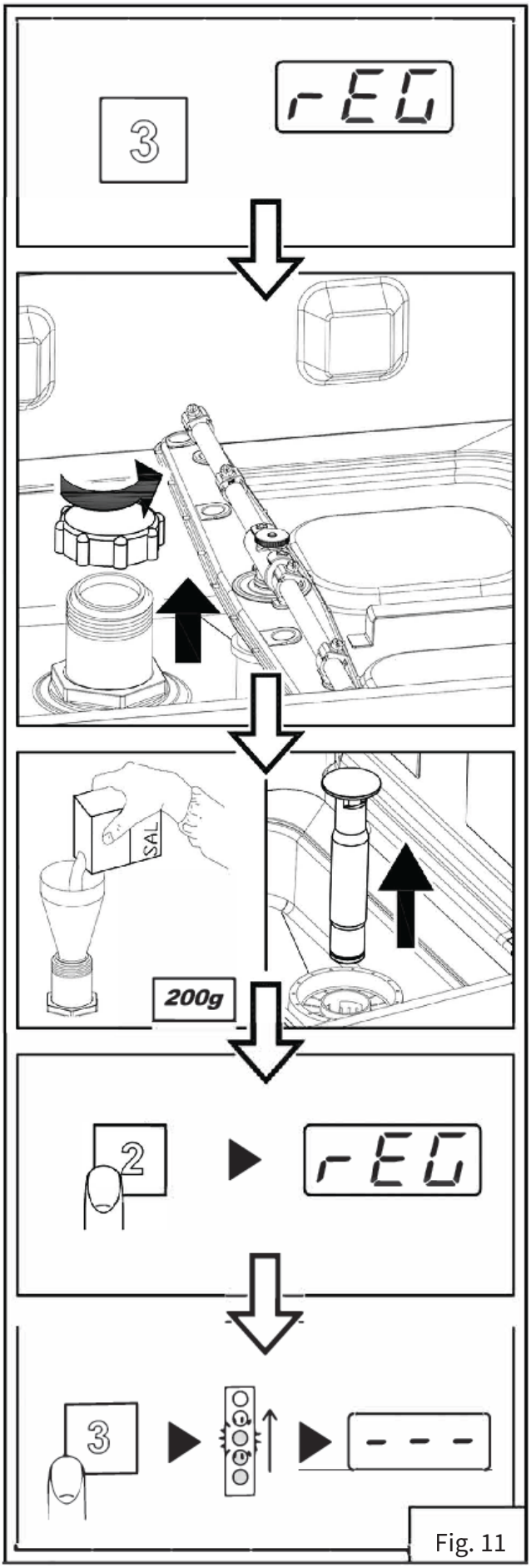

Fig. 11

Washing programme	Display on the screen	Washing programme	Po-	QQI 37; QQI 42				QQI 37P; QQI 42P			
				sec	Wash. temp.	Rinsing temp.	L/basket	sec	Wash. temp.	Rinsing temp.	L/basket
Programme 1	PR1	Short		60	60	65	1,6	60	60	65	1,6
Programme 2	PR2	Medium		120	60	65	1,6	120	60	65	1,6
Programme 3	PR3	Long		150	60	80	1,6	150	60	80	1,6
Continuous washing	LO	Continuous washing		/	/	/	/	/	/	/	/
Self-cleaning	DR	Quick self-cleaning		90	.	.	1,6	/	/	/	/
ProClean	CLE	Intensive automatic cleaning and draining		/	/	/	/	300	.	.	9,6
ProDrain	drA	Automatic discharge		/	/	/	/	90	.	.	.

Washing programme	Display on the screen	Washing programme	Po-	QQI 52; QQI 52T				QQI 52; QQI 52TP			
				sec	Wash. temp.	Rinsing temp.	L/basket	sec	Wash. temp.	Rinsing temp.	L/basket
Programme 1	PR1	Short		60	60	80	2,1	60	60	80	2,1
Programme 2	PR2	Medium		120	60	80	2,1	120	60	80	2,1
Programme 3	PR3	Long		150	60	80	2,1	150	60	80	2,1
Continuous washing	LO	Continuous washing		600	60	80	2,1	600	60	80	2,1
Self-cleaning	DR	Quick self-cleaning		120	.	.	2,1	/	/	/	/
ProClean	CLE	Intensive automatic cleaning and draining		/	/	/	/	300	.	.	22
ProDrain	drA	Automatic discharge		/	/	/	/	120	.	.	.

Washing programme	Display on the screen	Washing programme	Po-	QQI 102				QQI 102P			
				sec	Wash. temp.	Rinsing temp.	L/basket	sec	Wash. temp.	Rinsing temp.	L/basket
Programme 1	PR1	Short		60	60	80	2,1	60	60	80	2,1
Programme 2	PR2	Medium		120	60	80	2,1	120	60	80	2,1
Programme 3	PR3	Long		150	60	80	2,1	150	60	80	2,1
Continuous washing	LO	Continuous washing		600	60	80	2,1	600	60	80	2,1
Self-cleaning	DR	Quick self-cleaning		120	.	.	2,1	/	/	/	/
ProClean	CLE	Intensive automatic cleaning and draining		/	/	/	/	300	.	.	17
ProDrain	drA	Automatic discharge		/	/	/	/	120	.	.	.

Electrical connection

- The power supply shall be equipped with an omnipolar circuit breaker (main switch) to interrupt all contacts, including the neutral conductor, with a minimum 3 mm gap between contacts, and a thermal fuse or fuses which shall be rated for the rated capacity shown on the type plate of the machine.
- The main switch must be mounted on a power line near the equipment and can only be connected to one device.
- The mains voltage and frequency must match the data on the type plate.
- The installation must include a grounding system in accordance with applicable electrical safety codes to protect the operator and the appliance itself.

The electrical wiring that shall be the H07RN-F unit shall not be under tensile or compressive stress during normal operation or maintenance.

- The appliance must be connected to the equipotential system by means of the screw with the symbol.
- The equipotential cable must have a cross section of 10 mm2.
- Observe the polarities indicated on the wiring diagram.
- For further information, see the electrical wiring diagram.

Do not use multiple outlets, adapters, cables with insufficient cross-sections or type, or extensions that do not comply with the specified regulations for electrical installations.

Water circuit connection

The appliance must be connected to the water supply via a flexible hose. A shut-off valve (tap) must be installed between the water supply and the appliance solenoid valve.

The tap must be close to the appliance.

- The water supply, temperature and pressure must be in accordance with the technical data on the type plate on the machine.
- If the water hardness is greater than 14 F (8 dH), we recommend using the built-in water softener (available on request). If the water hardness is greater than 35 F (19.5 dH), install an external water softener downstream of the solenoid valve.
- If the water has a very high residual mineral concentration with high conductivity, we recommend installing a demineralization system.

Connection to the waste pipe

The waste pipework must consist of a free waste sump with a siphon suitable for the flow capacity of the drain hose supplied with the appliance. The hose shall be able to reach the sump without being stretched, restricted, kinked, squeezed, compressed or deformed in any other way.

- Drainage of the sump is based on gravity, so the waste sump must be lower than the base of the facility.
- If the drain is not lower than the base of the appliance, you can use the version with a waste pump (available on request).
- In this case, the discharge connection must not be more than 1 m high.
- Always check that the drain is working properly and is not blocked.
- Any other solutions must be approved by the manufacturer in advance.

Polish and detergent

The polish and detergent are dispensed into the machine by the machine‘s built-in dispenser (depending on the model).

- The dosage is set by the installer depending on the hardness of the water and also calibrates the dosing devices themselves.
- Before calibrating them, fill the dispenser supply tubes with the appropriate product.
- The units are calibrated directly via the control panel.
- The liquid level in the container must be sufficient for penetration; do not allow complete draining or refilling with corrosive or impure product.

NEVER use CHLORINE or HYPOCHLORITE based detergents.

We recommend installing an automatic detergent dispenser.

8. INSTRUCTIONS FOR USE

Fig. 1

Key and symbols

1 - ON/OFF BUTTON

2 - PROGRAM SELECTION BUTTON

3 - START BUTTON

4- INFORMATION DISPLAY

5 - STATUS BAR (LED)

Switching on the dishwasher

Fig. 2

- Turn on the main switch and open the external water supply.
- If necessary, check if an overflow is present.
- Press ON/OFF (1).
- INFORMATION DISPLAY (4) lights up, and Pr 1 lights up
- Filling starts automatically when the dishwasher is switched on.
- The point on the display flashes until the level is reached.
- The status light (5) illuminates from top to bottom to indicate that the dishwasher is heating up.
- When the operating temperature is reached, the STABLE LIGHT (5) will remain lit with the second light from below.
- Optimum washing conditions were thus achieved.

Filling the sockets

Fig. 3

To ensure that the dishwasher functions properly, follow the rules described below:

- Use a suitable drawer, fill it without overloading and without overlapping dishes.
- Always rinse dishes before putting them in the dishwasher; do not put dishes with dry or solid residue in the dishwasher.
- Place the empty dishes in the compartment with the bottom facing up.
- Place plates and similar utensils in the slanted compartment with the inner surface facing upwards.
- Place the cutlery in the cutlery basket with the handle facing downwards.
- Do not put silverware and stainless steel cutlery in the same cutlery basket, as silver will tarnish and may corrode the steel.
- Wash dishes immediately after use to prevent any food residue from hardening and sticking to the dishes.
- Use only sturdy, dishwasher-safe cookware.

Selection and launch cycle

- Press PROGRAM SELECT repeatedly (2), select the wash cycle that is suitable for the dishes you are going to wash; the display will show the number of the selected cycle (Fig. 4).
- To start this program, press START (3); the STATUS BAR (5) will flash and increase from bottom to top to

indicate the progress of this program.
- When the cycle is complete, the bar lights up in green (Fig. 5).
- For quick drying, remove the basket from the dishwasher as soon as the cycle is over.
- To end the wash cycle early, press START (3).

NOTE For the hooded version, auto start will be automatically enabled after the first duty cycle; subsequent cycles will be automatically enabled when the lid is closed. This operating mode is indicated on the display as „AS“.

Long wash (6 min.)

- This is an extended cycle; the time varies with the type of model.
- Cycle time 6 minutes

Starting the automatic cycle

This function is used to start the selected cycle automatically when the door is closed. To activate it, proceed as follows (Fig. 6):
- If it is not available by default, the function must first be activated via the Settings menu.
- With the appliance switched on and the door open, press and hold (for at least five seconds) START (3) until AS appears on the display.
- To deactivate this function, press START (3) again for five seconds with the door open.

Removing the built-in filter

- Move the washing and rinsing arm at right angles to the edge of the door (Fig. 7).
- Lift each semi-filter using the corresponding handle.

Emptying the dishwasher

Appliances without drain pump

Turn off the dishwasher.
- Remove the built-in filter (Fig. 7A).
- Pull out and remove the overflow tube (Fig. 8B).
- Wait until the bath is completely empty.
- If necessary, remove the bath filter and clean it (Fig. 8C).

Appliances with drain cycle (*optional add-on)

If used, remove the built-in filter (Fig. 7).
- If used, remove the overflow by pulling it upwards (Fig. 9).
- Close the door.
- Select Dr. Cycle.
- Press START (3) to start the cycle.
- The dishwasher performs a drain cycle, including a self-clean cycle (*where expected), and then shuts

itself off.

- If necessary, remove the bath filter and clean it (Fig. 8C).

Switching off the dishwasher

- Press ON/OFF (1), the central segments on the DISPLAY (4) will light up, indicating that the appliance is powered.

Resin regeneration (*optional add-on)

When rEG flashes on the display in devices with an internal softener, you must run a regeneration cycle to restore proper function of the internal softener. Proceed as follows (Fig. 11):

- Empty and clean the dishwasher.
- Remove the built-in filter and open the salt tank in the bath.
- Pour in 250 - 300 g of regeneration salt (grain size of 1 or 2 mm table salt without additives).
- Close the fixed tank.
- Make sure the overflow has been removed.
- Close the door and switch on the dishwasher.
- Press the (2) PROGRAM SELECT button for the resin regeneration cycle; the display will show rEG.
- Press the START button (3) to start one cycle.
- The regeneration cycle takes about 20 minutes.
- When the cycle is complete, the dishwasher switches itself off.

N.B. Do not switch off the dishwasher when the regeneration cycle is in progress

Information display

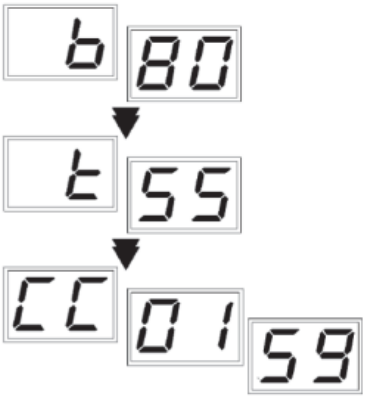

With the dishwasher switched on, press PROGRAM OPTION (2) for five seconds; the following information will be displayed in that order:

- „t“ washing temperature
- „b“ rinse temperature
- „CC“ the number of washing cycles performed during the lifetime of the dishwasher.

List of viewable messages

Door open

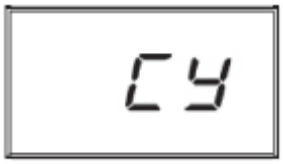

Number of cycles performed

Rinsing temperature

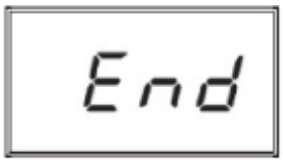

End of cycle

Washing temperature

Auto start activated

Cleans the washing chamber and discharges bath and boiler

Long wash (6 minutes)

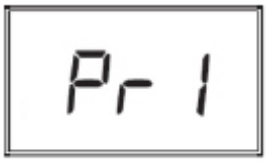

Short washing programme

Discharge cycle

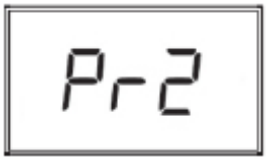

Standard washing programme

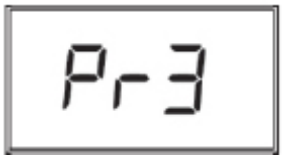

Long washing programme

End of shift

- Always drain the dishwasher at the end of the day, as described in the Draining the dishwasher section.
- Disconnect the power supply using the main switch and close the external water tap.
- Perform routine maintenance and cleaning of the equipment as described in the Maintenance section.
- If possible, leave the door ajar to prevent the build-up of unpleasant odours inside the appliance.

MAINTENANCE

Before carrying out any maintenance, drain all water, disconnect the power supply and turn off the supply water tap.

Do not use water under pressure - it could damage electrical equipment.
When it is cold, wash only the body of the dishwasher, and only with products specifically designed for

steel.
If there is a risk of ice forming, drain the water from the boiler and wash pump.

Cleaning

To keep the equipment in good working order, it must be regularly maintained as explained below.
We recommend regular sanitation treatments using suitable non-corrosive commercial products.

Cleaning the filter unit

Do this cleaning at the end of the day or when you see that the filters are dirty:
1. Remove and clean the baskets.
2. Empty the tub as explained in the „Draining the Equipment“ section.
3. Remove and thoroughly clean all filters.
4. Do not use abrasive products to clean the tub.
5. When cleaning is complete, put back all removed parts.

Shoulder cleaning

The wash and rinse arms are easily removable to clean their nozzles and prevent clogging/hardening.
Proceed as follows (Fig. 10):
- Remove the spray arms by releasing the quick-release fitting.
- Wash all parts under a stream of running water and clean the nozzles thoroughly with a toothpick or pointed tool if necessary.
- Clean the pivot pins of the arms inside the machine and wash and rinse the discharge area with water.
- Refit the arms and check that they rotate freely.

SELF DIAGNOSTICS
The machine is equipped with a self-diagnosis system that registers and warns of a number of malfunctions.

Fault	Description and possible remedies
Er01	No rinsing. The rinsing cycle was not completed correctly. Make sure that the rinsing nozzles are clean.
Er02	No water drained. The water was not drained or drained incorrectly. Check that the drain pipe is not bent or crushed and that the siphon and filters are not blocked. In machines fitted with an overflow pipe, remove this before starting the drainage cycle.
Er03	Rinse temperature reset fault. The boiler temperature did not reset in the set time during the washing cycle. Switch the machine off and then on and run a new cycle.
Er04	Water filling in tank fault. Make sure the pipes are connected correctly, and that the water tap is open. Where foreseen, check the presence of the overflow. Switch the dishwasher off and then on and fill again.
Er05	Tank thermometer fault (Probe open). The machine does not read the tank temperature value. Switch the dishwasher off and then on.
Er06	Tank thermometer fault (Probe short circuited). The machine does not read the tank temperature value. Switch the dishwasher off and then on.
Er07	Boiler thermometer fault (Probe open). The machine does not read the boiler temperature value. Switch the dishwasher off and then on.
Er08	Boiler thermometer fault (Probe short circuited). The machine does not read the boiler temperature value. Switch the dishwasher off and then on.

Er09		Boiler loading timeout: boiler not filled. Impossible to carry out rinse cycle. Check that the water tap is open. Switch the dishwasher off and then on and run a new cycle.
Er21		Insufficient rinse. The right amount of rinsing did not take place; make sure the rinse nozzles are clean. The error does not block the machine.
Er22		Tank temperature reset fault. The tank temperature did not reset in the set time during the washing cycle. Switch the machine off and then on and run a new cycle.
Er25		Run external regeneration. The number of litres set for external water treatment equipment has been reached; the error does not prevent dishwasher operation. The message can be reset from the settings in menu 12.
	ErSF	Electro-mechanical safety device. The boiler or tub safety thermostats have been tripped, or the tub safety pressure switch has been triggered.
	ErSL	Level safety switch. Incorrect water level in the tank.
	Erb	Excessive Boiler Temperature. Probable heating contactor/relay failure.
	Ert	Excessive Tub Temperature. Probable heating contactor/relay failure.
drt		Dirty filter. Incorrect water level in tub, caused by dirty filter or poorly inserted overflow.

Fault	**Description and possible remedies**
ErSI	Supply safety error. Fatal error, contact a technical assistance centre.
Er98	Soft start error. Soft start system error, contact a technical assistance centre.
NO SALT	No salt. In dishwashers with water softener, this means that there is no salt. Add salt.
NO DT	No detergent. Add detergent in the priming tank.
NO BL	No rinse aid. Add rinse aid in the priming tank.
SERV	Maintenance required. General maintenance is required, if pre-set.
REG ON	Regeneration in progress. The regeneration cycle for the water softener resin is underway.
REG REQ	Regeneration Required. Start the regeneration if not automatically scheduled.
Er27	Boiler gradient error. The boiler is not heating correctly.
Er28	Tub gradient error. The tub is not heating correctly.
Er99	Auxiliary board error. Communication with the auxiliary board is not correct.
Er30	Automatic open error. In dishwashers with hood with automatic open, the opening system is not operating correctly. Check that nothing is stopping the hood from opening. If the problem persists, contact a technical assistance centre.
Er31	Automatic close error. In dishwashers with hood with automatic open, the closing system is not operating correctly. Check that nothing is stopping the hood from closing. If the problem persists, contact a technical assistance centre.
Er33	Osmosis with minimum pressure. Check that the water tap is open.
Er34	Osmosis water loss. Close the power and water supply for the dishwasher; contact a technical assistance centre.
Er35	Osmosis conductivity error. Osmosis system does not work properly, contact a technical assistance centre.
Er36	Osmosis filter. The osmosis filter needs to be replaced; contact a technical assistance centre.
Er37	Boiler heating timeout. The rinse water heating element does not work properly; contact a technical assistance centre.
Er38	Tub heating timeout. The wash water heating element does not work properly; contact a technical assistance centre.
Er39	Faulty boiler pressure switch.
Er40	Faulty tank pressure switch.
Switching the dishwasher off and then on again „resets“ the signals; if after carrying out the instructions given the problem persists, contact an Authorised Service Centre.	

SETTINGS

The following settings must only be configured by a qualified technician.

The following parameters can be set during installation after accessing the Settings menu as follows:

- The device is in standby mode with the door open.

- Press buttons 1 and 3 simultaneously (ON/OFF and START) simultaneously for 5 seconds and enter key CH 12 (buttons 3 and 4 to change the parameter, and button 1 to confirm).

- Then press the (1) ON/OFF button repeatedly to scroll through the following headings, enabling activa-

tion and/or changing them using the (3) and (4) buttons (the changed parameter is in memory without being confirmed). The list of parameters may vary according to the type of dishwasher.

	Language	**Choice of language**
b	Boiler tempe-rature	Boiler temperature setting for programs. For the versions with atmospheric boiler (rinse pump) there are different settings for each program (b1 - b2 - b3).
t	Tank tempera-ture	Temperature control of the bath for programs. The rinse pump versions have different settings for each individual program (t1 - t2 - t3).
tH	ThermoStop	It enables the Thermostop function, which guarantees the correct rinsing temperature.
ES	Energy saving	Enables the Energy Saver function, which provides energy savings when the dishwasher is switched on but not in use.
dn	Pump washing resource	Manual control of the detergent dispenser.
dn	Auxiliary rinse pump	Manual control of the polish dispenser.
rn	Handheld rinsing	Manual control of the rinse pump.
dt	Dosage washing resource	Detergent dosing time.
bL	Dosage polishes	Polish dosing time.
dH	Water hardness	Setting the hardness of the incoming water (dishwashers with water softener): enter the values shown in the table below.
dr	Waste pump	Manual activation of the waste pump.
AA	Autostart Autoactivation	Automatically enable auto start.
CC	Cycle counter	Cycle counter.
Once all necessary parameters are set, then to exit and save all changes to memory, simply press and hold button 1 for a few seconds until the dashes appear.		

NWater hardness adjustment for built-in water softener

Set the hardness level of the incoming water dH in the Settings menu, observing the following data in the following table:

Measured hardness		**dH**
°fr	**dGH**	**Number**
0 ÷ 20	0 ÷ 11	1
21 ÷ 25	12 ÷ 14	2
26 ÷ 30	15 ÷ 17	3
31 ÷ 35	17 ÷ 20	4
36 ÷ 40	20 ÷ 22	5
41 ÷ 45	23 ÷ 25	6
46 ÷ 50	26 ÷ 28	7
51 ÷ 55	29 ÷ 31	8
56 ÷ 60	31 ÷ 34	9

9. CLEANING AND MAINTENANCE

It is recommended to have the device checked with a specialist service at least once a year. All the interventions in the device can only be carried out by a qualified person who has the authorization to do so. **CAUTION!** The device must not be cleaned with direct or pressure water. Clean the equipment daily. Daily maintenance extends the life and efficiency of the equipment. Always turn off the main inlet to the device. Wash the stainless steel parts with a damp cloth with a detergent without coarse particles and wipe dry. Do not use abrasive or corrosive cleaning agents. Attention! Before using the device, it is necessary to remove the protective foil from the entire surface, and then wash it well with water with detergent, and then wipe it with a damp cloth. **ALERT!** The warranty does not apply to all consumables subject to normal wear (rubber seals, bulbs, glass and plastic parts, etc.). The warranty also does not apply to the device if the installation is not carried out in accordance with the instructions - an authorized worker according to the corresponding standards and if the equipment was unprofessionally manipulated (interventions in the internal equipment, etc.) or were operated by unhappy staff and contrary to the instructions for use, further The warranty does not apply to damage by natural effects or other external intervention. **Required service organization 2 times a year. After the lifetime, the shipping packaging and equipment are submitted to the collection, according to the regulations on waste management and hazardous waste.**